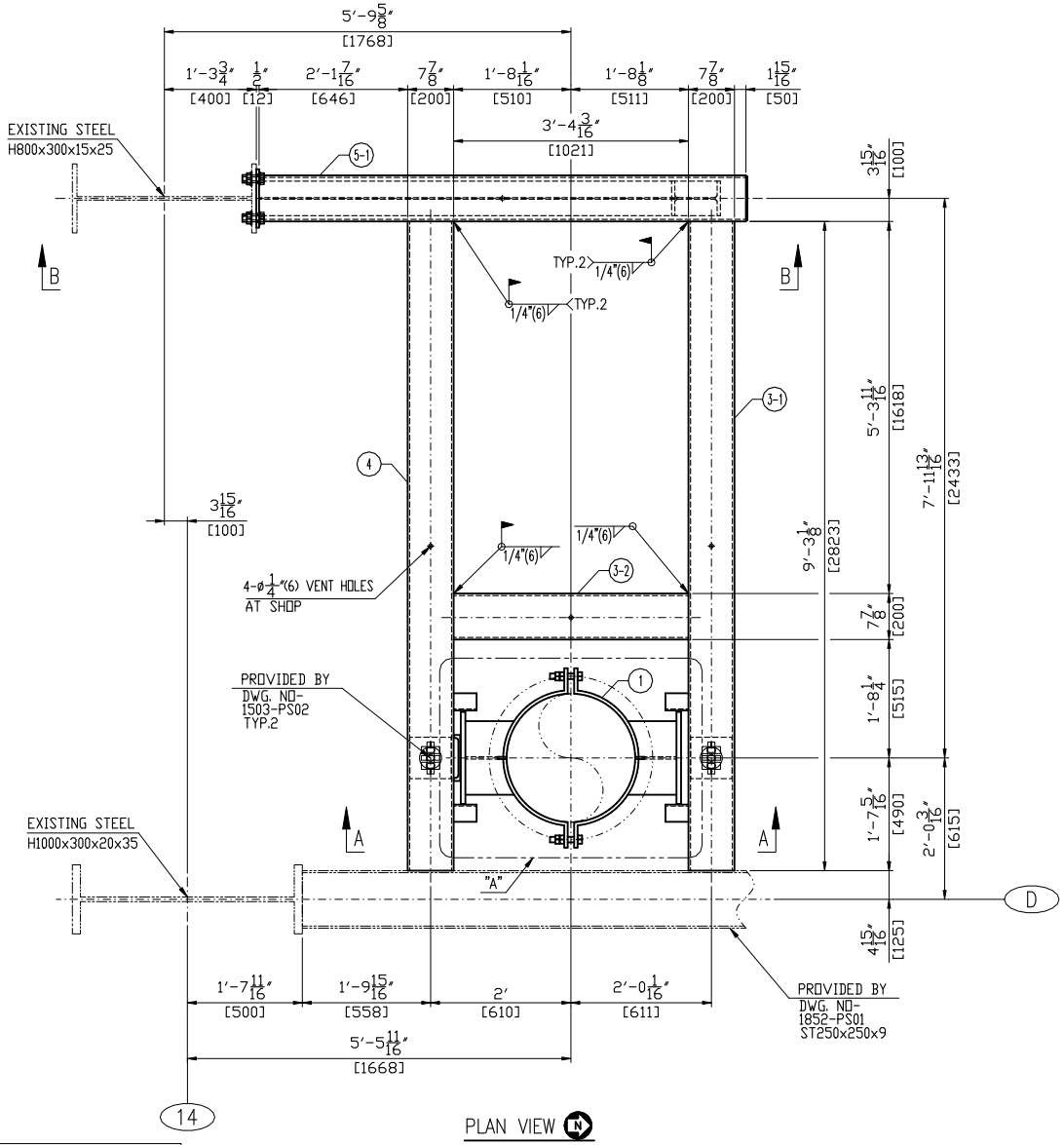

PLAN VIEW

Revision History

Rev	Description	Date	Drawn / Checked By Approved By
–	INITIAL ISSUE	2026-01-21	Drawn J.B.HONG Checked By T.H.KIM Approved By B.L.CHOI

BILL OF MATERIAL — TOTAL WEIGHT : 1644.2 LB — SELECTION NO. 1503 — AREA LEFT

ITEM	DESCRIPTION	TYPE OR SIZE	LENGTH(mm)	LENGTH(IN)	QTY.	MATERIAL	WEIGHT(LB)/UNIT	WEIGHT(LB)/TOTAL	REMARK
1	PIPE CLAMP	PCSDC-550-479			1	A36		324.96	NOTE #2
2	CHANNEL	C150x75x6.5x10	100	3.94	4	A36	4.10	16.40	NOTE #3
3-1	SQUARE TUBE(1-I6)	ST200x200x9	2823	111.14	1	A500 Gr.B		325.50	NOTE #3
3-2	SQUARE TUBE(1-I6)	ST200x200x9	1021	40.20	1	A500 Gr.B		117.72	NOTE #3
3-3	PLATE	PL20x180x180			1	A36		11.21	NOTE #3
4-1	SQUARE TUBE(1-I6)	ST200x200x9	2823	111.14	1	A500 Gr.B		325.50	NOTE #3
4-2	PLATE	PL20x180x180			1	A36		11.21	NOTE #3
5-1	SQUARE TUBE(1-I6)	ST200x200x9	2117	83.35	1	A500 Gr.B		244.09	NOTE #3
5-2	H-BEAM	H150x150x7x10	2836	111.65	1	A36		196.95	NOTE #3
5-3	PLATE(4-I27-SLOT33)	PL12x254x356			1	A36		18.78	NOTE #3
5-4	PLATE(4-I27-SLOT33)	PL12x254x406			1	A36		21.42	NOTE #3
5-5	COVER PLATE(4-R14)	PL6x191x191			1	A36		3.79	NOTE #3
6	CUT CHANNEL	C200x80x7.5x11	200	7.87	1	A36		10.85	NOTE #3
7	H.S.B/N/2PW	1"-8 UNC-3"			8	A325	1.63	13.04	NOTE #3

PIPING INFORMATION

SUPPORT NUMBER	ISO NO. : 1503			PIPE SIZE (IN): 22			PIPE MATERIAL: A335-P11		
	SUPPORT COORDINATES			OPER. TEMP (F) : 744			INSULATION (IN): 3		
				DESIGN LOADS (KIPS)			DESIGN MOVEMENTS (IN)		
	X	Y	Z	X	Y	Z	X	Y	Z
1503-PS03	61'-5 13/16'	24'-11 3/16'	76'-5 5/8'	±1. 357	±0. 435	-0. 13	-0. 19	1. 17	-0. 73
	18740	7600	23307						

"Z" UP, "Y" NORTH, "X" GAS FLOW EAST

HANGER SETTING DATA(EACH)		TOTAL TRAVEL	- IN
SPRING LOAD	- KIPS	THERMAL MOVEMENT	- IN
HOT LOAD	- KIPS	SPRING RATE	- LB/IN
COLD LOAD	- KIPS	VARIABILITY	- %

UNIT NO. : 11

NOTES:

1. PIPE SUPPORT SHOP ATTACHMENTS, GENERAL NOTES, WELD & PLATE DETAILS 1635572-D1S0-3800
2. THIS ITEM WILL BE SUPPLIED BY ENGINEERED PIPE SUPPORT SUPPLIER.
3. THIS ITEM WILL BE SUPPLIED BY STEEL SUPPORT FABRICATOR.
4. PIPE ATTACHMENTS THAT ARE SHOP WELDED ONTO THE PIPE ARE SUPPLIED BY THE PIPE FABRICATOR.
5. BILL OF MATERIAL SHOWN ARE FOR ONE (1) SUPPORT, THERE IS ONE (1) SUPPORT PER UNIT
6. REFER TO DRAWING 1635572-D2S0-3801~3804 FOR TYPICAL SHOP WELDED CONNECTION DETAILS NOT SPECIFIED ON THIS DRAWING.
7. FF* : 1 15/16(50)mm FIELD ADJUST
8. THIS ITEM WILL BE SUPPLIED BY CUSTOMER.

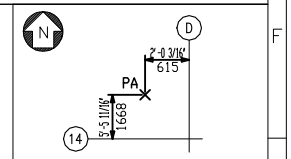

KEY PLAN

ISOMETRIC VIEW

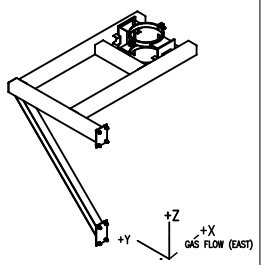

NLR
Copyright© GE Vernova and/or its affiliates 2026
All rights reserved. The information herein is proprietary information of GE Vernova and/or its affiliates. Thus, it is being provided with the explicit expectation of restricted use. All persons or legal entities receiving this information shall be deemed by the act of its receipt to have contractually agreed to make no duplications, reproductions of any nature by any means, modifications, disclosures, or use use any portion of this material; except as is expressly authorized in writing by GE Vernova and/or its affiliates.

THIRD ANGLE PROJECTION

Similar To: NONE	Created By: SEONGHWA		MLI No. NONE
First Made For: 1635572	Checked By: VIMAL.V	Approved By: Kim, Chunrae	IEC61355 No. MTC
GE VERNOVA	Document Type: DETAIL DRAWING		Sheet Size A2
	Document Title: PIPE SUPPORT FOR CRH STEAM		
Creation Date 2026-01-21	Drawing No. 1635572-1503-PS03	Revision –	Sheet 1 OF 3

ITEM	DESCRIPTION	TYPE OR SIZE	LENGTH(mm)	LENGTH(IN)	QTY.	MATERIAL	WEIGHT(LB)/UNIT	WEIGHT(LB)/TOTAL	REMARK
8	LUG PLATE	PL10x40x100			4	A387-11	0.69	2.76	NOTE #4

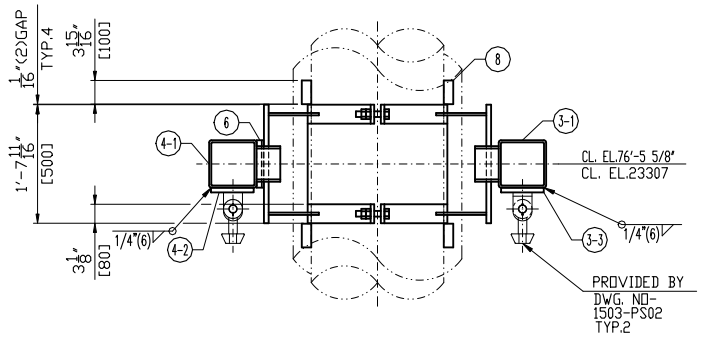

SECTION A-A
LOOKING WEST

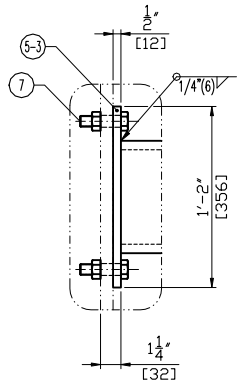

DETAIL "B"

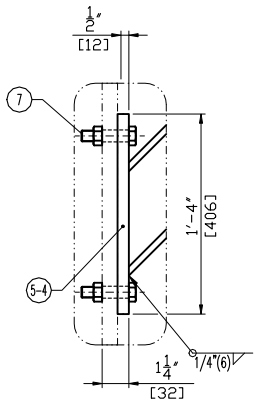

DETAIL "C"

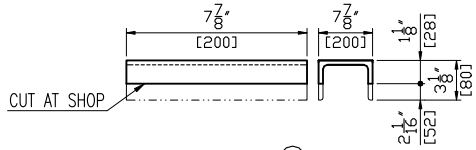

ITEM 6

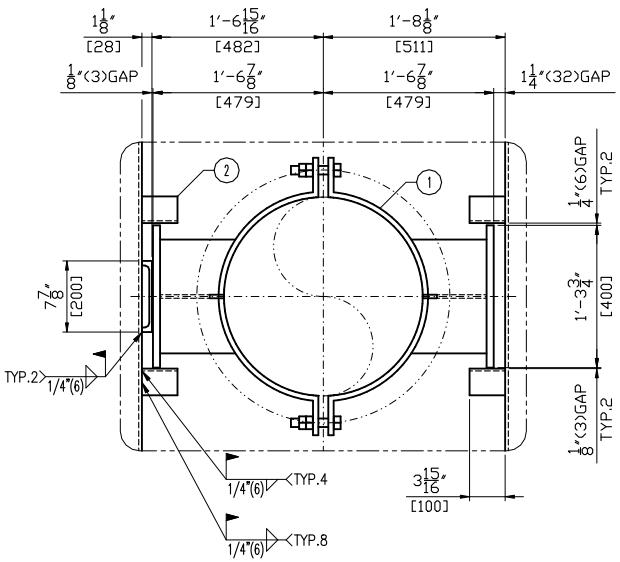

DETAIL "A"

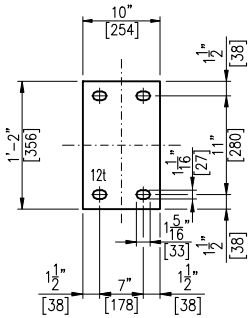

ITEM 5-3

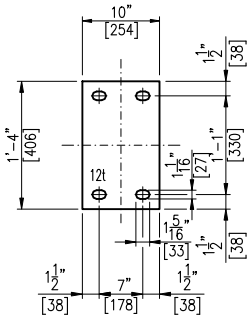

ITEM 5-4

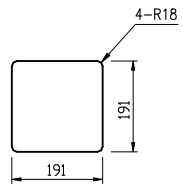

ITEM 5-5

NLR

Copyright © GE Vernova and/or its affiliates 2026
All rights reserved. The information herein is proprietary information of GE Vernova and/or its affiliates.

GE VERNOVA	Document Type: DETAIL DRAWING	Sheet Size A2
	Document Title: PIPE SUPPORT FOR CRH STEAM	
Creation Date 2026-01-21	Drawing No. 1635572-1503-PS03	Revision – / Sheet 2 OF 3

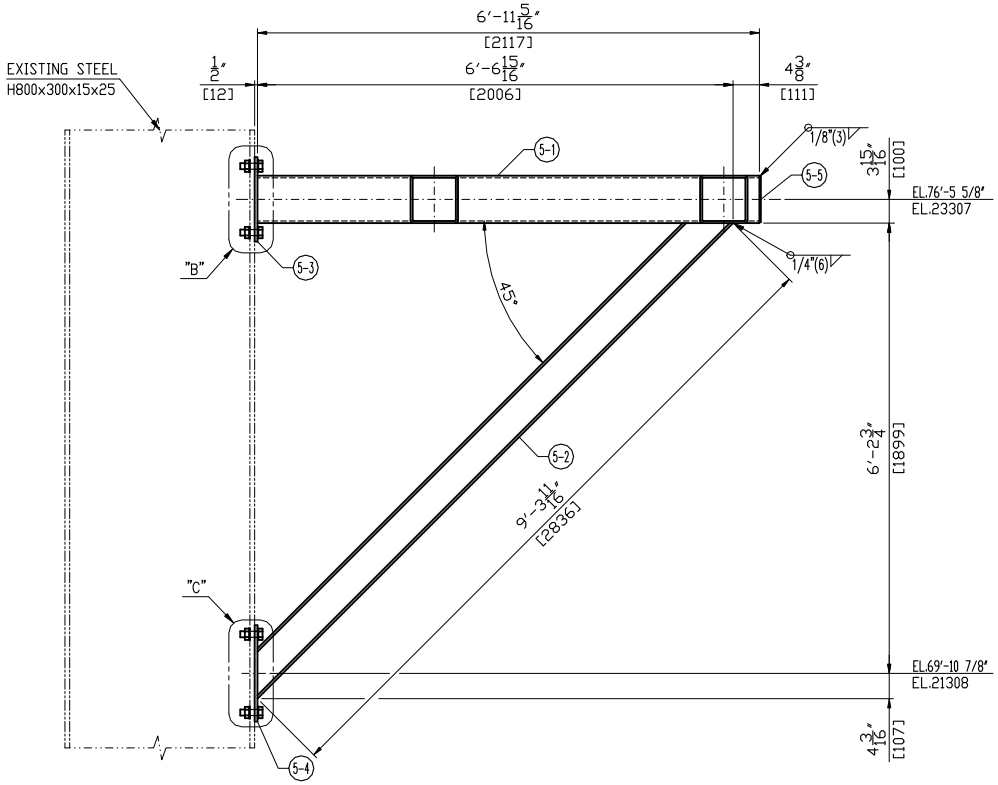

SECTION B–B
LOOKING WEST

NLR

Copyright© GE Vernova and/or its affiliates 2026
All rights reserved. The information herein is proprietary information of GE Vernova and/or its affiliates.

GE VERNOVA	Document Type: DETAIL DRAWING		Sheet Size A2
	Document Title: PIPE SUPPORT FOR CRH STEAM		
Creation Date 2026-01-21	Drawing No. 1635572-1503-PS03	Revision –	Sheet 3 OF 3